PDF
UV

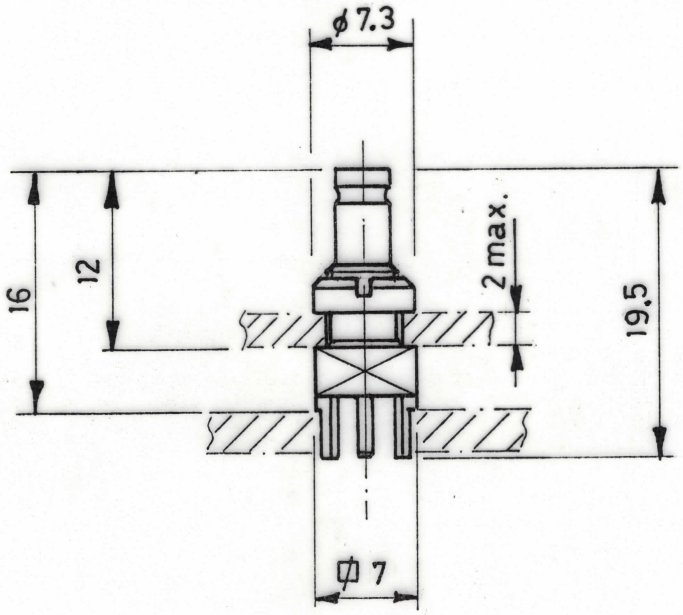

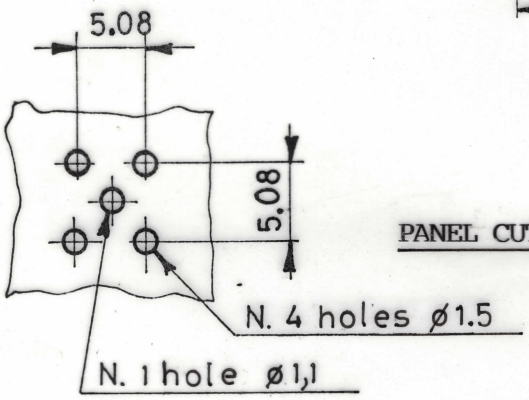

PANEL CUTOUT DIMENSIONS

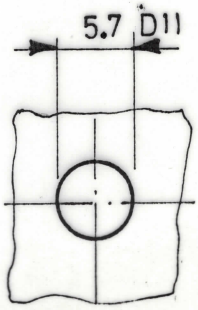

DISEGNATO	DENOMINAZIONE	
VISTO / CONTR.	1.0/2.3 SERIES COAXIAL CONNECTOR	
DATA 12.11.90	STRAIGHT SOCKET FOR P.C.B.	
SCALA 2:1	CM S.r.l.	CODICE BPD.07.001
NOTE		